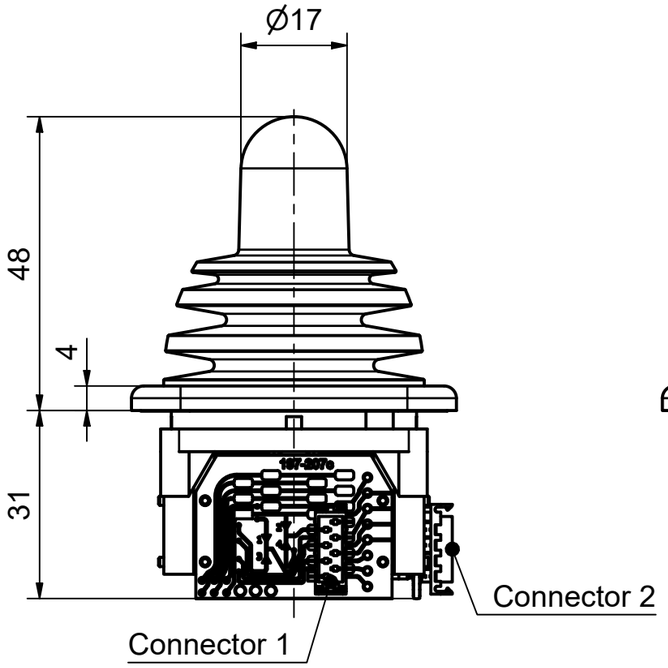

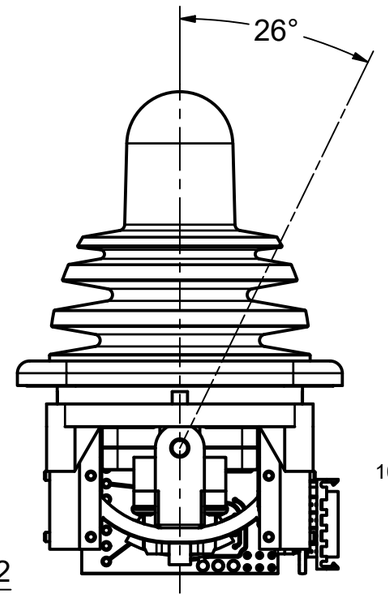

Gate
(Top view)

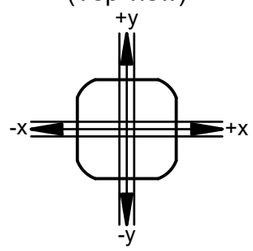

Output diagram
(x-, y-axis)

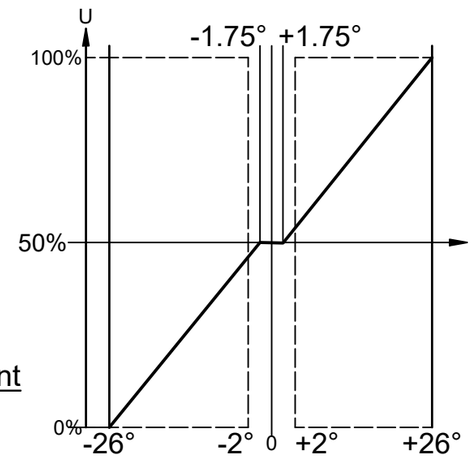

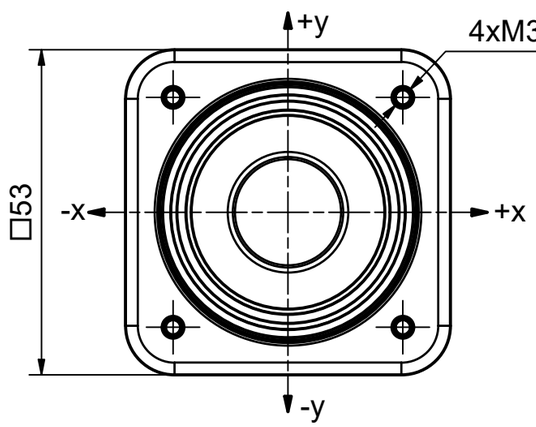

Pin assignment
connector 1

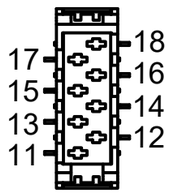

Pin assignment
connector 2

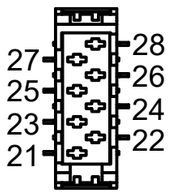

Description	
Joystick type SK 197-0162	
Number of axes	2-axes, x-, y-axis
Operation by	Rubber bellow
Cross guidance	rigid
Retaining spring	Middle, P/N: 60-112.03
Center tab	±1.75°
Switch function	1-1-1
Switchpoint α	±2°
Connector	Micro-Match, 8-poles, P/N: 338069-8
Electrical characteristics	
Operating voltage	30 V DC
Sensor	Conductive plastic
Contact rating	Zero potential difference between segments
	5 V DC, 5mA
Resistance value	5 kOhm ±20%
Pin connector 1	
11	GND
12	x-axis wiper
13	V+
14	x-axis switch -
15	x-axis switch +
16	x-axis switch common
17	x-axis switch neutral position
18	x-axis center tap
Pin connector 2	
21	GND
22	y-axis wiper
23	V+
24	y-axis switch -
25	y-axis switch +
26	y-axis switch common
27	y-axis switch neutral position
28	y-axis center tap

Panel mounting holes

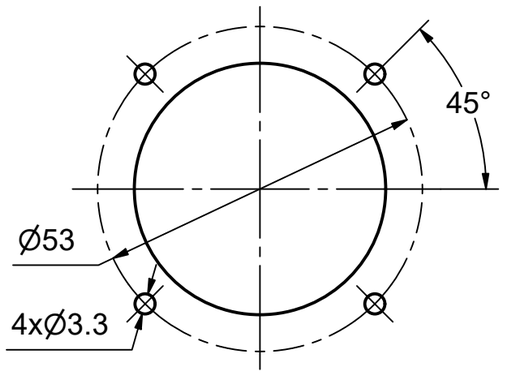

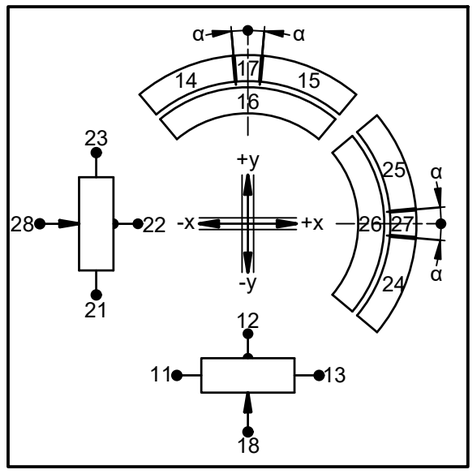

Preliminary
19.06.24

Oberfläche:

Massstab: 1:1 | Position: | Menge:

All dimensions in mm

	Datum	Name
Bearb.	19.06.24	Kiener M.
Geprü.		

Joystick

Joysticks AG
joysticks + sensors
Erlenstrasse 32
CH-2555 Brügg
Switzerland
+41 32 652 33 30
info@gtjoysticks.ch
www.gtjoysticks.ch

197-0162

Blatt 1 / 1 Bl

Idx	Änderungen	Datum	B'arb.	Gepr.

S:\Entwicklung\01_CAD-Daten\01_AIDATA-GT\1_1_Joysticks\SK197\Zusammenstellungen\197-0162.idw